Copyright: This drawing is our property and patented for us according to the law of copyright and associated rights !

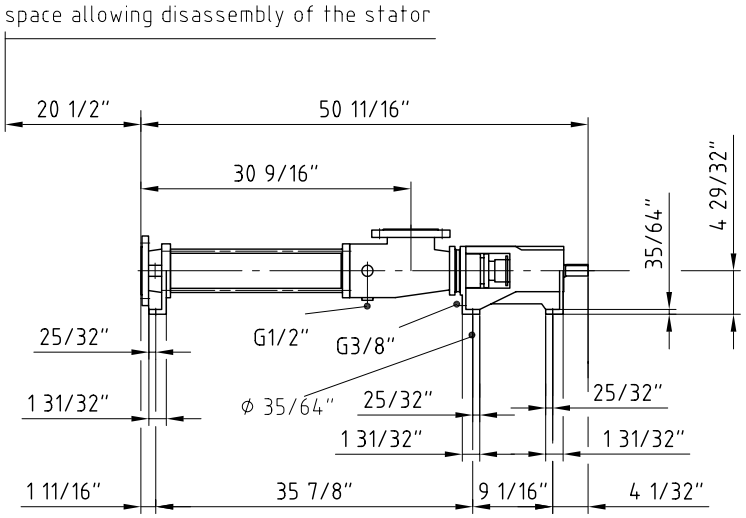

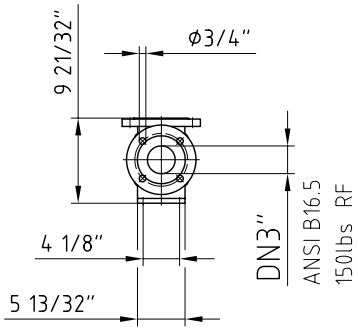

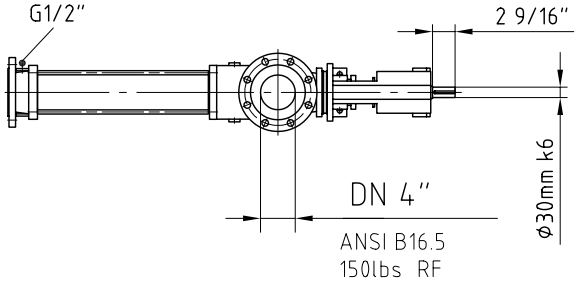

fitting key DIN 6885

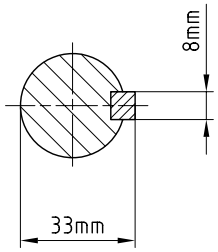

* design see pump data sheet

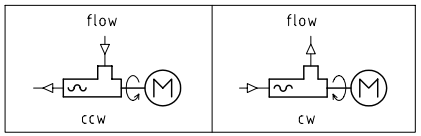

Quant.	Denomination	Item	Material	Note	Weight / kg
1	pump: NS 10-12 / 17-6L / 30-6LT / 15-12T	8001			

	1994	Name	Day	Scale	Weight	Denomination
seepex, Inc. 511 Speedway Drive Enon, OH 45323 www.seepex.com	Drawn	OV	11.10.	1:20	60 kg	dimensional drawing
	Checked			EDP-No. L:\LFDZCHNG.110\11499.DWG		Drawing-no. 260-C01/0100-C-002A4

seepex.com

changes of dimensions reserved